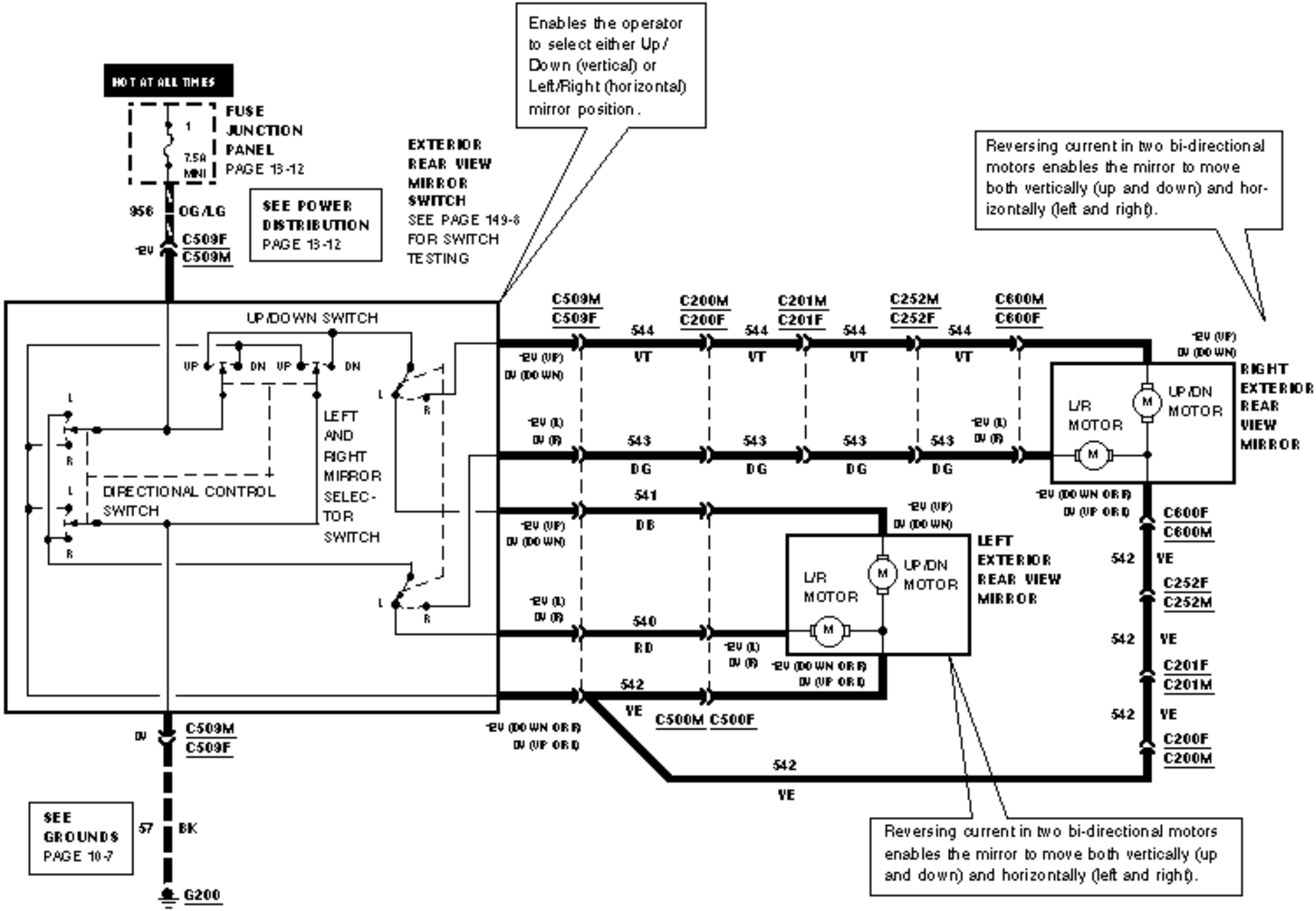
HOT AT ALL TIMES
FUSE JUNCTION PANEL
PAGE 13-12
1
7.5A MINI
956
OG/LG
12V
C509F
C509M
SEE POWER DISTRIBUTION
PAGE 13-12
EXTERIOR REAR VIEW MIRROR SWITCH
SEE PAGE 149-8 FOR SWITCH TESTING
Enables the operator to select either Up/Down (vertical) or Left/Right (horizontal) mirror position.
Reversing current in two bi-directional motors enables the mirror to move both vertically (up and down) and horizontally (left and right).
UP/DOWN SWITCH
UP
DN
LEFT AND RIGHT MIRROR SELECTOR SWITCH
DIRECTIONAL CONTROL SWITCH
L
R
C509M
C509F
C200M
C200F
C201M
C201F
C252M
C252F
C600M
C600F
544
VT
543
DG
541
DB
540
RD
542
VE
12V (UP)
0V (DOWN)
12V (L)
0V (R)
12V (DOWN OR R)
0V (UP OR L)
RIGHT EXTERIOR REAR VIEW MIRROR
L/R MOTOR
UP/DN MOTOR
M
LEFT EXTERIOR REAR VIEW MIRROR
C500M
C500F
C252F
C252M
C201F
C201M
C200F
C200M
0V
57
BK
SEE GROUNDS
PAGE 10-7
G200