-7

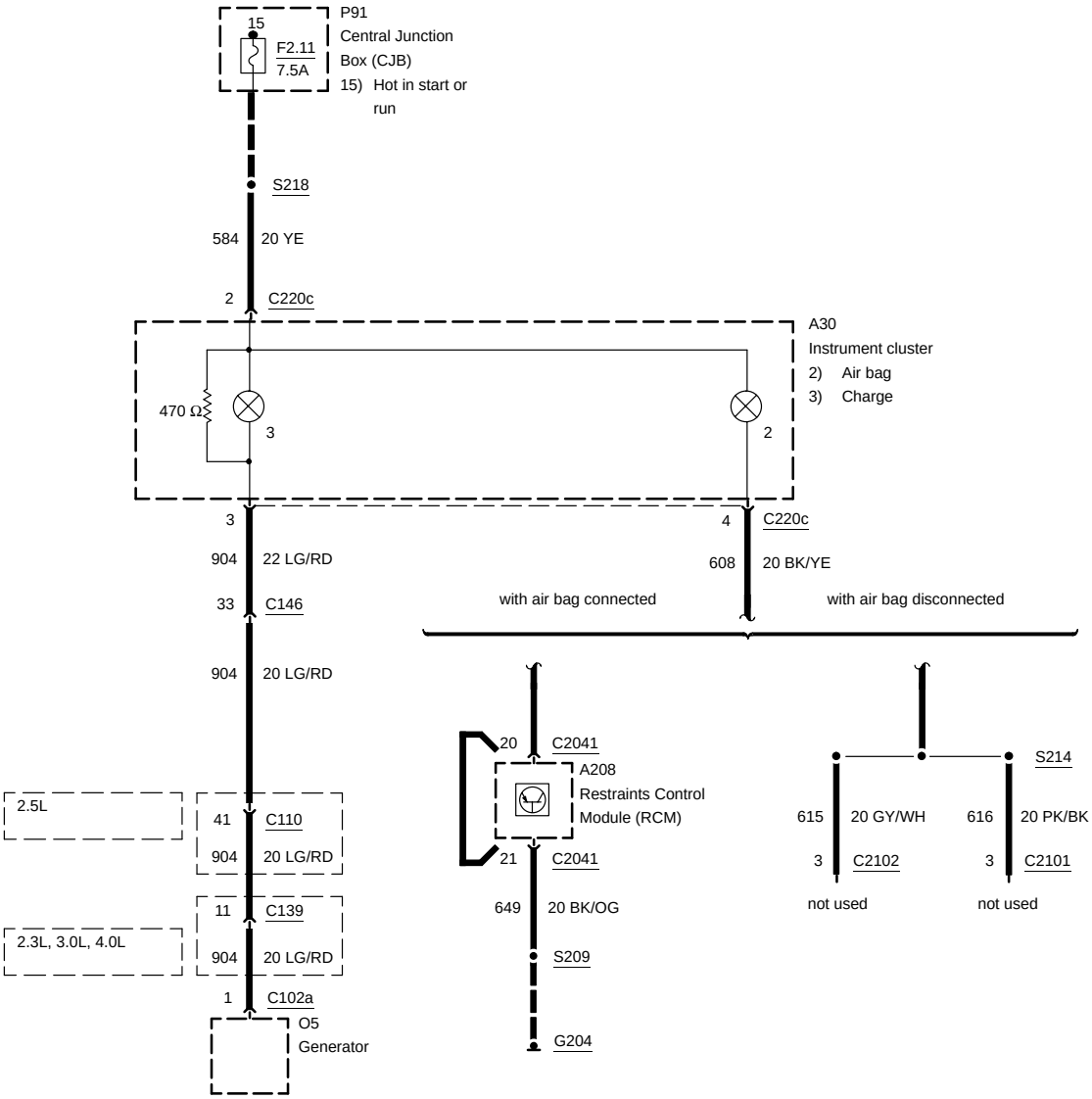
P91
Central Junction
Box (CJB)
15) Hot in start or
run
15
F2.11
7.5A
S218
584
20 YE
2
C220c
A30
Instrument cluster
2) Air bag
3) Charge
470 Ω
3
2
3
904
22 LG/RD
33
C146
4
C220c
608
20 BK/YE
with air bag connected
with air bag disconnected
904
20 LG/RD
20
C2041
A208
Restraints Control
Module (RCM)
21
C2041
649
20 BK/OG
S209
G204
S214
615
20 GY/WH
3
C2102
not used
616
20 PK/BK
3
C2101
not used
2.5L
41
C110
904
20 LG/RD
11
C139
2.3L, 3.0L, 4.0L
904
20 LG/RD
1
C102a
O5
Generator